PHILIPS

Fortimo

LED system

LED Line 2 ft
2200 lm 1R LV3

Datasheet

Fortimo **LED Line Gen3**

Fortimo LED Line systems are designed to produce pure white light for general lighting applications with high efficiency levels. The Fortimo LED Line portfolio consists of 3 main ranges of products, which have been differentiated by the number of rows of LEDs contained on the module. Fortimo LED Linear encompasses a wide range, offering solutions for all the different types of linear luminaires.

Key features and benefits

- State-of-the-art LED module efficiency of up to 165 lm/W
- Long life-time: >50,000 hours
- High color rendering (CRI >80 and >90)
- Excellent color consistency of 3 SDCM
- Choice of color temperatures (3000 K, 4000 K and 5000 K)
- Two lumen packages: 650 lm and 1100 lm per foot/280 mm
- LED module range with 1, 2 or 3 rows of LEDs
- Tunable lumen output, efficacy and lifetime
- Push-in connectors enabling automated wiring
- Five year system warranty

Suitable for:

Zhaga

May 2016

Ordering data

Commercial product name	EOC	12NC	Box quantity
Fortimo LED line 2ft 2200lm 830 1R LV3	8718696 412749 00	9290 009 19906	180
Fortimo LED line 2ft 2200lm 840 1R LV3	8718696 412848 00	9290 009 20106	180
Fortimo LED line 2ft 2200lm 850 1R LV3	8718696 412862 00	9290 009 20206	180

Drive currents and case temperatures

Parameter	Nominal*	Life**	Max***	Unit
I (current through the LED module)	468	600	700	mA
Tc (case temperature at Tc point)	45	80	80	°C

* Nominal value at which typical performance is specified.
** Value at which lifetime L70B50 ≥ 50,000 hour is specified.
*** Maximum value for safe operation; do not operate above this value.

Optical characteristics - table per color (CCT)

Fortimo LED line 2 ft 2200 lm 830 1R LV3

Parameter	Min	Typ	Max	Unit
Correlated color temperature (CCT)		3000		K
Color coordinates (CIEx, CIEy)*		(0.430,0.398)		-
CRI**	80			-
Radiation angle		120		deg

Color consistency of 3 SDCM, averaged over the module.
R9 of 3, typical value.

Operation point	830	lm	lm/W
80% I-nom 374 mA	Tc 25 °C	1737	152
	Tc-nom 45 °C	1691	151
	Tc-life 80 °C	1594	146
I-nom 468 mA	Tc 25 °C	2148	146
	Tc-nom 45°C	**2092**	**145**
	Tc-life 80 °C	1971	140
I-life 600 mA	Tc 25 °C	2712	138
	Tc-nom 45 °C	2640	137
	Tc-life 80 °C	2488	132

Tolerance for flux data is ±7.5%.
Tolerance for efficacy data is ±10%.

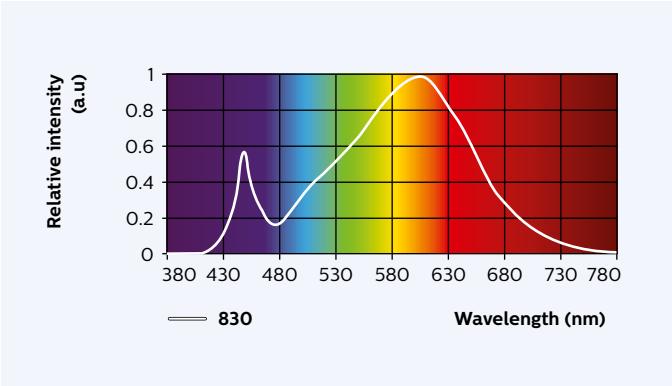

Fortimo LED line 2 ft 2200 lm 840 1R LV3

Parameter	Min	Typ	Max	Unit
Correlated color temperature (CCT)		4000		K
Color coordinates (CIEx, CIEy)*		(0.381,0.378)		-
CRI**	80			-
Radiation angle		120		deg

Color consistency of 3 SDCM, averaged over the module.
R9 of 16, typical value.

Operation point	840	lm	lm/W
80% I-nom 374 mA	Tc 25 °C	1827	160
	Tc-nom 45 °C	1779	158
	Tc-life 80 °C	1676	154
I-nom 468 mA	Tc 25 °C	2259	154
	Tc-nom 45 °C	**2200**	**152**
	Tc-life 80 °C	2073	147
I-life 600 mA	Tc 25 °C	2852	146
	Tc-nom 45 °C	2777	144
	Tc-life 80 °C	2617	139

Tolerance for flux data is ±7.5%.
Tolerance for efficacy data is ±10%.

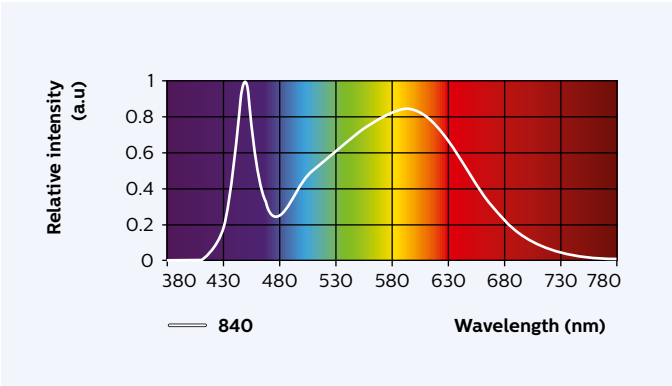

Fortimo LED line 2 ft 2200 lm 850 1R LV3

Parameter	Min	Typ	Max	Unit
Correlated color temperature (CCT)		5000		K
Color coordinates (CIEx, CIEy)*		(0.343,0.351)		-
CRI**	80			-
Radiation angle		120		deg

Color consistency of 3 SDCM, averaged over the module.
R9 of 11, typical value.

Operation point	850	lm	lm/W
80% I-nom 374 mA	Tc 25 °C	1827	160
	Tc-nom 45 °C	1779	158
	Tc-life 80 °C	1676	154
I-nom 468 mA	Tc 25 °C	2259	154
	Tc-nom 45 °C	**2200**	**152**
	Tc-life 80 °C	2073	147
I-life 600 mA	Tc 25 °C	2852	146
	Tc-nom 45 °C	2777	144
	Tc-life 80 °C	2617	139

Tolerance for flux data is ±7.5%.
Tolerance for efficacy data is ±10%.

Measurement tolerance is ±5% for the flux data and 6% for the efficacy data.
* Measurement tolerance is ± 0.005
** Measurement tolerance is ± 1.5

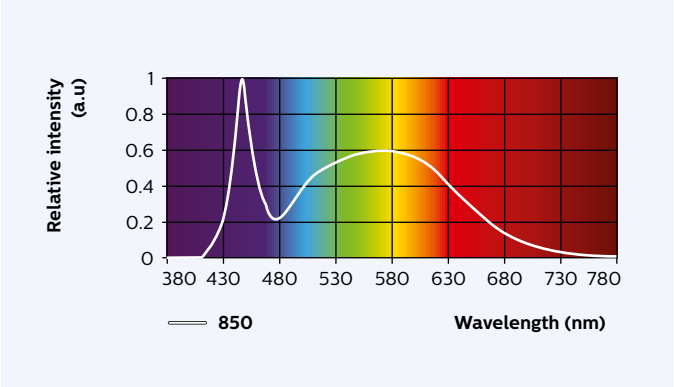

Beam shape

The Philips LED module generates a Lambertian beam shape, which is a pragmatic starting point for OEMs wishing to design secondary optics.

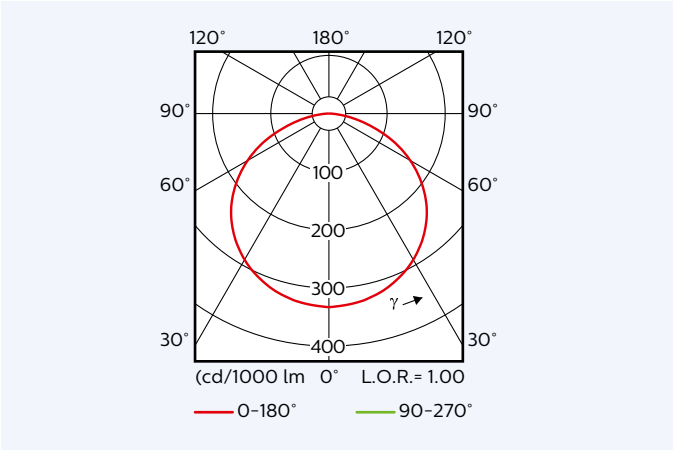

Electrical characteristics

Parameter	Min	Typ	Max	Unit
Nominal current		468		mA
Forward voltage	29.4	30.9	32.4	V
Power consumption	13.8	14.5	15.2	W
Energy efficiency label		A++		
Minimum dimming for performance	10			%
Number of parallel modules per chain			2	
Bins		2 (C and D)		

Specifications stated at Tc-nom and I-nom.

Performance over life

Lumen maintenance

Operation point	Time x 1000 hours	L70			L80			L90		
		B50	B20	B10	B50	B20	B10	B50	B20	B10
80% I-nom 374 mA	Tc 25 °C	>70	>70	>70	>70	>70	>70	36	35	35
	Tc-nom 45 °C	>70	>70	>70	65	63	61	30	29	29
	Tc-life 80 °C	70	70	68	45	43	42	21	21	20
I-nom 468 mA	Tc 25 °C	>70	>70	>70	>70	70	69	34	33	32
	Tc-nom 45 °C	>70	>70	>70	61	58	57	29	28	27
	Tc-life 80 °C	68	65	64	42	41	40	20	19	19
I-life 600 mA	Tc 25 °C	>70	>70	>70	66	64	62	31	30	29
	Tc-nom 45 °C	>70	>70	>70	55	53	52	26	25	25
	Tc-life 80 °C	61	59	58	38	37	36	18	17	17

Values in the table are based on available LM80 LED data (12,000h). Lumen maintenance will be updated once additional measurement data becomes available.

Parameter	Min	Typ	Max	Unit
Δu'v' at 6000 hours			0.007	-

Specifications stated while Tc < Tc-life and I < I-life.

Absolute maximum ratings

Parameter	Min	Typ	Max	Unit
Current through the LED module (I-max)			700	mA
Case temperature (Tc-max)			80	°C
Power rated at U-max and I-max			25.2	W
ESD (direct contact)			8	kV
ESD (air)			15	kV
Working voltage (between input to metal mounting plate)			120	Vdc
Voltage strength (Input to metal mounting plate)			1240	Vac
Ambient temperature	-40			°C

Wiring

Specification item	Value	Unit	Condition
Input wire cross-section	0.2...0.75	mm^2	Solid
	18...24	AWG	
	0.3..0.5	mm^2	Stranded
	20..22	AWG	
Input wire strip length	7.5..8.5	mm	
Tested cable length	4000	mm	Total length of wiring including LED modules, one way

Connector suited for robot wiring.

Mechanical characteristics

Parameter	Min	Typ	Max	Unit
Length	560.2	560.7	561.2	mm
Width	39.5	40	40.5	mm
Height excl. connector	2	2.1	2.2	mm
Height incl. connector	5.6	5.8	6	mm
Warpage (IPC-TM-650)			4	%

Bow & Twist of the PCB after production tested and released according IPC-TM-650 2.4.22.

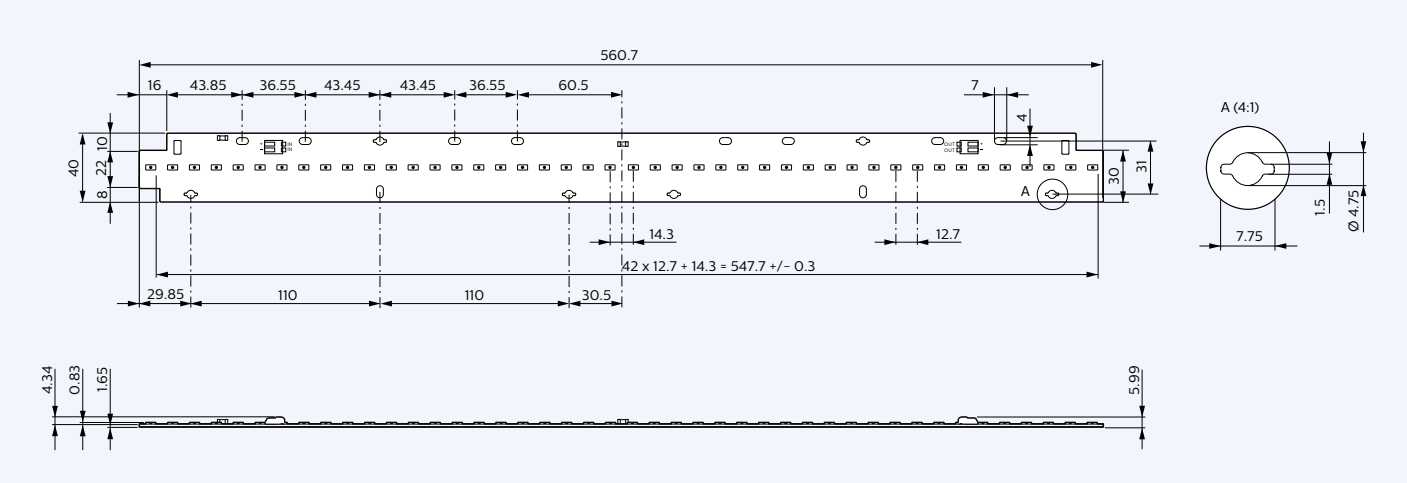

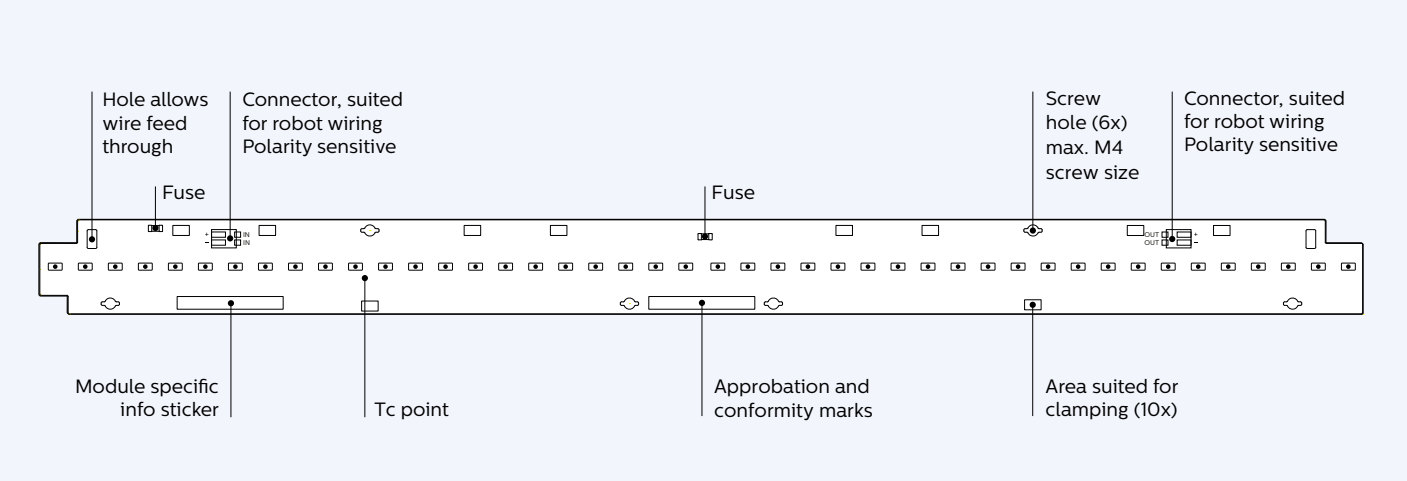

Application information

Compliance and approval
IEC / EN 62031, IEC / EN 62471, UL 8750

Photobiological safety
Risk group: Risk group 1

Environmental
RoHS / REACH

Application information

Zhaga	
Designation of the Book-7 LLE category	L56W4
Luminous Flux category	C020
CCT category	3000 K, 4000 K, 5000 K
CRI	80
The position of the temperature measurement point tp	Same as Tc point
The value of tp,max	45

IP rating	**No IP rating**
Overheating protection	No protection
Luminaire class	IEC Class II

Thermal switching table

Calculated number of switches at which the survival rate of the population ≥90%, at a given ambient temperature and delta T with repect to Tc (where Tc = Tambient + delta T)

		Tambient [°C]											
		-40	**-30**	**-20**	**-10**	**0**	**10**	**20**	**30**	**40**	**50**	**60**	**70**
delta T [°C] (delta T = Tc - Tambient)	10	Continuous operation or dimming only	>100 k	>100 k	>100 k	>100 k	>100 k	>100 k	>100 k	>100 k	>100 k	>100 k	>100 k
	20		>100 k	>100 k	>100 k	>100 k	>100 k	>100 k	>100 k	>100 k	>100 k	>100 k	X
	30		>100 k	>100 k	>100 k	>100 k	>100 k	>100 k	>100 k	>100 k	>100 k	X	X
	40		45 k	45 k	45 k	45 k	45 k	45 k	45 k	45 k	X	X	X
	50		20 k	20 k	20 k	20 k	20 k	20 k	20 k	X	X	X	X
	60		10 k	10 k	10 k	10 k	10 k	10 k	X	X	X	X	X
	70		5 k	5 k	5 k	5 k	5 k	X	X	X	X	X	X
	80		3 k	3 k	3 k	3 k	X	X	X	X	X	X	X
	90		2 k	2 k	2 k	X	X	X	X	X	X	X	X
	100		1 k	1 k	X	X	X	X	X	X	X	X	X

Tuning information

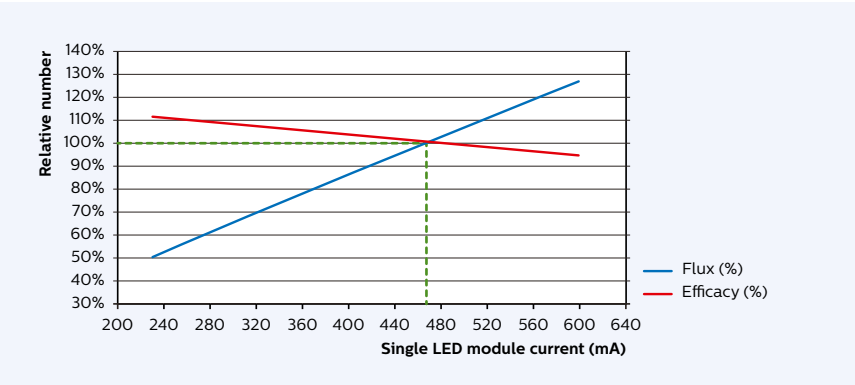

Flux and efficacy versus current

	I [mA]	Flux [%]	Efficacy [%]
(I-nom x 50%)	230	50%	111%
	280	61%	109%
	340	74%	106%
	400	86%	103%
(I-nom)	**468**	**100%**	**100%**
	520	110%	98%
(I-life)	600	126%	95%

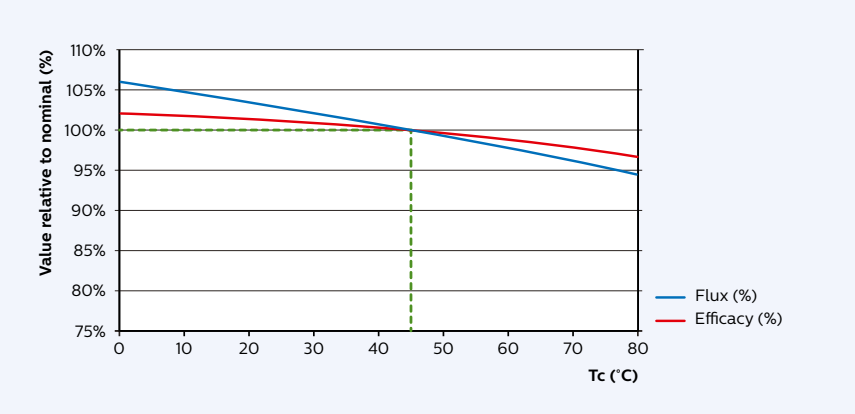

Flux and efficacy versus temperature at Tc

	Tc [°C]	Flux [%]	Efficacy [%]
(Tc-life)	80	94%	97%
	75	95%	97%
	70	96%	98%
(Tc-nom)	**45**	**100%**	**100%**
	25	103%	101%
	0	106%	102%

Lumen maintenance

Lumen maintenance at l-life and Tc-life conditions

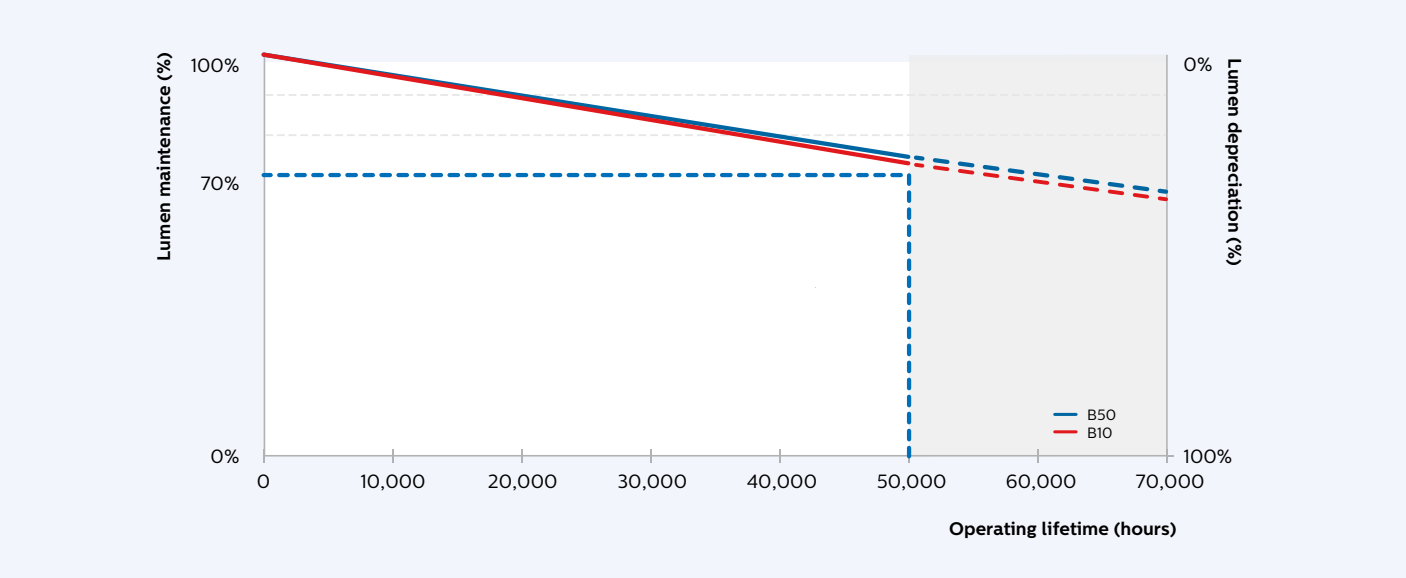

Lumen depreciation as a function of operating hours for l-life and Tc-life.

Lumen maintenance for B50 at current l-life conditions

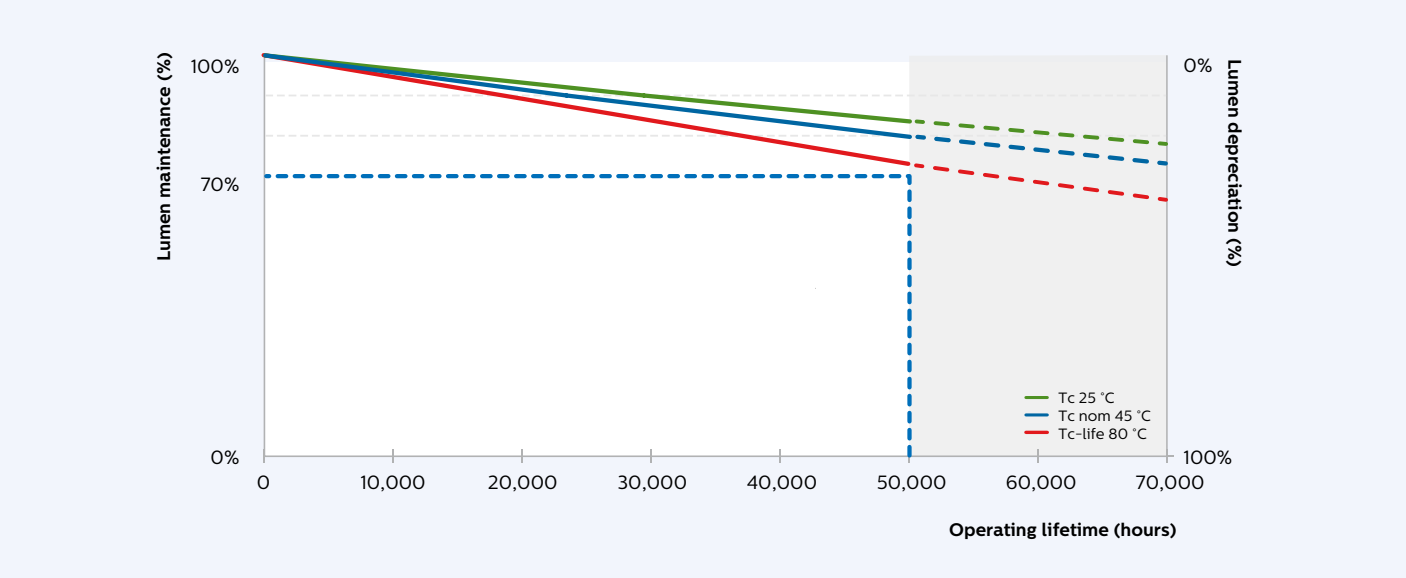

Lumen depreciation as a function of operating hours at different Tc values and l-life.

Wiring schematic

Examples

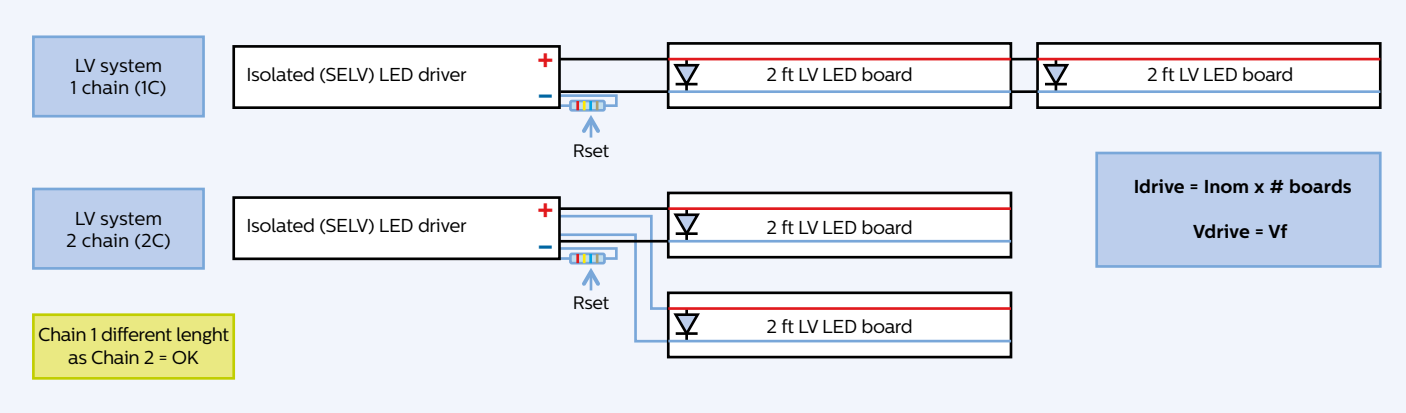

© Philips Lighting Holding B.V. 2016. All rights reserved. Philips reserves the right to make changes in specifications and/or to discontinue any product at any time without notice or obligation and will not be liable for any consequences resulting from the use of this publication.

05/2016
Data subject to change

www.philips.com/technology
www.philips.com/fortimo
www.philips.com/xitanium