Design-in guide

Philips CertaFlux SLS

PHILIPS

Product Overview

Philips Certaflux SLS module takes the final barriers out of LED spotlight conversion. The innovative design with integrated heat sink and Lens makes an easy design-in and allows for a fast and efficient luminaries development.
Applications – The Certaflux SLS module is designed for spotlight fixture that can be used in retail stores, restaurants and cafes, etc.
The product portfolio covers a lumen level from 800lm, 1600lm, 2400lm with color temperatures of 3000K and 4000K; also two color silver and black versions are available.

12nc	Product description	lumen output	CRI	Beam Angle	Input Voltage	Frequency	Wattage	Lifetime (B50L70)	Diameter
9290 009 04606	CertaFlux SLS 800lm S 830 15D	850 lm	80	15'	220~240	50/60HZ	11W	25K Hrs	75mm
9290 009 04706	CertaFlux SLS 800lm S 840 15D	900 lm	80	15'	220~240	50/60HZ	11W	25K Hrs	75mm
9290 009 04806	CertaFlux SLS 800lm S 830 24D	850 lm	80	24'	220~240	50/60HZ	11W	25K Hrs	75mm
9290 009 04906	CertaFlux SLS 800lm S 840 24D	900 lm	80	24'	220~240	50/60HZ	11W	25K Hrs	75mm
9290 009 05006	CertaFlux SLS 800lm S 830 36D	850 lm	80	36'	220~240	50/60HZ	11W	25K Hrs	75mm
9290 009 05106	CertaFlux SLS 800lm S 840 36D	900 lm	80	36'	220~240	50/60HZ	11W	25K Hrs	75mm
9290 009 05206	CertaFlux SLS 1600lm S 830 15D	1700 lm	80	15'	220~240	50/60HZ	22W	25K Hrs	99mm
9290 009 05306	CertaFlux SLS 1600lm S 840 15D	1850 lm	80	15'	220~240	50/60HZ	22W	25K Hrs	99mm
9290 009 05406	CertaFlux SLS 1600lm S 830 24D	1700 lm	80	24'	220~240	50/60HZ	22W	25K Hrs	99mm
9290 009 05506	CertaFlux SLS 1600lm S 840 24D	1850 lm	80	24'	220~240	50/60HZ	22W	25K Hrs	99mm
9290 009 05606	CertaFlux SLS 1600lm S 830 36D	1700 lm	80	36'	220~240	50/60HZ	22W	25K Hrs	99mm
9290 009 05706	CertaFlux SLS 1600lm S 840 36D	1850 lm	80	36'	220~240	50/60HZ	22W	25K Hrs	99mm
9290 009 05806	CertaFlux SLS 2400lm S 830 24D	2550 lm	80	24'	220~240	50/60HZ	33W	25K Hrs	99mm
9290 009 05906	CertaFlux SLS 2400lm S 840 24D	2750 lm	80	24'	220~240	50/60HZ	33W	25K Hrs	99mm
9290 009 06006	CertaFlux SLS 2400lm S 830 36D	2550 lm	80	36'	220~240	50/60HZ	33W	25K Hrs	99mm
9290 009 06106	CertaFlux SLS 2400lm S 840 36D	2750 lm	80	36'	220~240	50/60HZ	33W	25K Hrs	99mm
9290 009 25706	CertaFlux SLS 800lm B 830 15D	800lm	80	15'	220~240	50/60HZ	11W	25K Hrs	75mm
9290 009 25806	CertaFlux SLS 800lm B 840 15D	825lm	80	15'	220~240	50/60HZ	11W	25K Hrs	75mm
9290 009 25906	CertaFlux SLS 800lm B 830 24D	800lm	80	24'	220~240	50/60HZ	11W	25K Hrs	75mm
9290 009 26006	CertaFlux SLS 800lm B 840 24D	825lm	80	24'	220~240	50/60HZ	11W	25K Hrs	75mm
9290 009 26106	CertaFlux SLS 800lm B 830 36D	800lm	80	36'	220~240	50/60HZ	11W	25K Hrs	75mm
9290 009 26206	CertaFlux SLS 800lm B 840 36D	825lm	80	36'	220~240	50/60HZ	11W	25K Hrs	75mm
9290 009 26306	CertaFlux SLS 1600lm B 830 15D	1600lm	80	15'	220~240	50/60HZ	22W	25K Hrs	99mm
9290 009 26406	CertaFlux SLS 1600lm B 840 15D	1650lm	80	15'	220~240	50/60HZ	22W	25K Hrs	99mm
9290 009 26506	CertaFlux SLS 1600lm B 830 24D	1600lm	80	24'	220~240	50/60HZ	22W	25K Hrs	99mm
9290 009 26606	CertaFlux SLS 1600lm B 840 24D	1650lm	80	24'	220~240	50/60HZ	22W	25K Hrs	99mm
9290 009 26706	CertaFlux SLS 1600lm B 830 36D	1600lm	80	36'	220~240	50/60HZ	22W	25K Hrs	99mm
9290 009 26806	CertaFlux SLS 1600lm B 840 36D	1650lm	80	36'	220~240	50/60HZ	22W	25K Hrs	99mm
9290 009 26906	CertaFlux SLS 2400lm B 830 24D	2400lm	80	24'	220~240	50/60HZ	33W	25K Hrs	99mm
9290 009 27006	CertaFlux SLS 2400lm B 840 24D	2475lm	80	24'	220~240	50/60HZ	33W	25K Hrs	99mm
9290 009 27106	CertaFlux SLS 2400lm B 830 36D	2400lm	80	36'	220~240	50/60HZ	33W	25K Hrs	99mm
9290 009 27206	CertaFlux SLS 2400lm B 840 36D	2475lm	80	36'	220~240	50/60HZ	33W	25K Hrs	99mm

Dimensions of Certaflux SLS

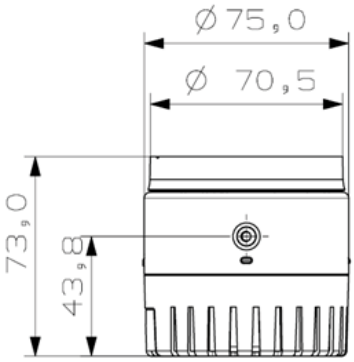

800 lumens

Dimension	Value			Unit
	Min.	Typ.	Max.	
Outer Diameter	74.5	75	75.5	mm
Height	72	73	74	mm

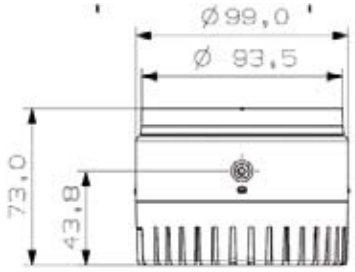

1600 lumens

Dimension	Value			Unit
	Min.	Typ.	Max.	
Outer Diameter	98.5	99	99.5	mm
Height	72	73	74	mm

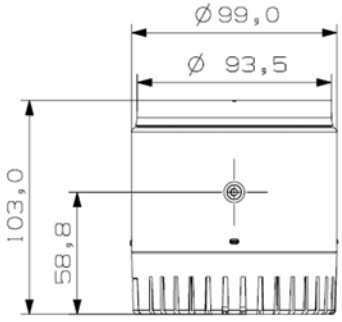

2400 lumens

Dimension	Value			Unit
	Min.	Typ.	Max.	
Outer Diameter	98.5	99	99.5	mm
Height	102	103	104	mm

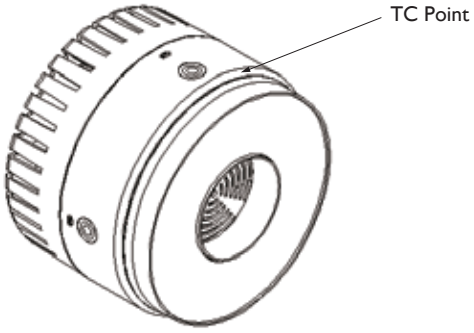

Case Temperature (Tc) of the module

The Tc is 75' Celcius to guarantee life time, and Tc max. is 85' Celcius for safety.

Maximum tilt angle70 Degree.

It is measured at the predefined point (see illustration) using guidelines recommended by IEC 60598. For these modules a test box measuring 600 x 600 x 200 mm was used and the reading is taken after the temperature stabilizes.

Surface Temperature of the Module

It is recommended that at all times the module and/or fixture is not touched whenever it is turned on. When touch is a must for reasons like reinstallation or readjusting angle, please always turn it off for at least 5 minutes until the surface temperature cools down.

IEC 60598-1 guides that touchable surfaces that are made of metal parts are 60°C (and below) and for non-metal parts 75°C (and below).

Touchable surfaces are generally described as any point on a surface where persons usually stand or move about to the limits which a person can reach with the hand, in any direction, without assistance. When the Certaflux SLS module is assembled as a fixture and installed in the application area the touchable surface could mean the outer surface of the heat sink and the fixture accessory.

Operation Conditions

Below conditions must be met to ensure the performance of the Philips Certaflux SLS

Environmental Parameters

Tamb	Ambient temperature		-20	25	35	°C
Vin_220V230V	Input voltage	RMS	198	230	264	Vac
f	Mains frequency		47	50/60	63	Hz
Hop	Relative humidity	Non condensing	10		90	%

The expected average operating time per year in a common indoor spotlight application is 4,000 hours per year. This is an average of 10-11 hours per day continuously throughout its lifetime. Switching cycle is 1 cycle per day, e.g. where the module is turned on once and turned off once per day.

Average operating time per year	4000 hours
Average number of on/off switching cycles over life time	1 cycle/day

Noise Parameters

Background	SLS 800lm	SLS 1600lm	SLS 2400lm
18.48 dB	18.59 dB	18.96 dB	19.39 dB

Use Conditions in Track Rail

1. 25°C is the ambient temperature to ensure the 25000 hours product lifetime
2. 35°C is the maximum ambient temperature
3. Completed fixture with Certaflux SLS should be installed and works in the 3 terms track rail
4. Completed fixture with Certaflux SLS should be installed at the untouchable place.

Performance & Reliability

The SLS module has a lifetime of 25000 hours (L70B50) when the operating and environmental parameters in this guide are met.

Please refer to the plots for detailed information.

Light Performance

Beam Angle

The typical beam angle of the Certaflux SLS module is 15, 24 and 36 degrees for 800lm and 1600lm products; 24 and 36 degrees for 2400lm products. This is measured by a goniometer. If a secondary diffuser and/or reflector extender is added to the module, the beam angle could change. It is advised that measurements are calculated again.

Unified Glare Rating (UGR)

The rounded average UGR is 26. If the application requires a lower UGR a possible solution would be to add a diffuser and/or reflector extender.

Color Rendering Index (CRI) & SDCM

CRI is 80 and SDCM is 5 for all SLS products

Light Distribution of the modules

Tested by goniometer. IES files are available from our website.

800 Lm, 15D

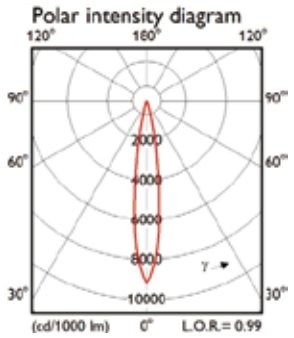

800 Lm, 24D

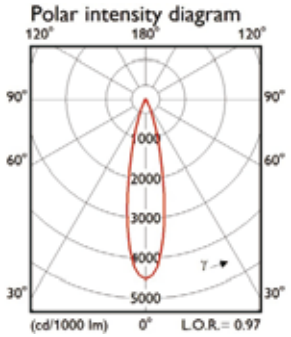

800 Lm, 36D

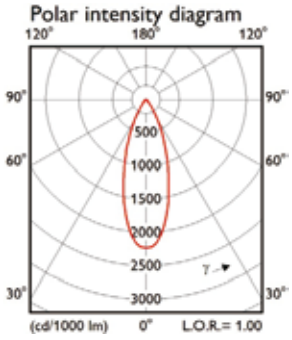

1600 Lm, 15D

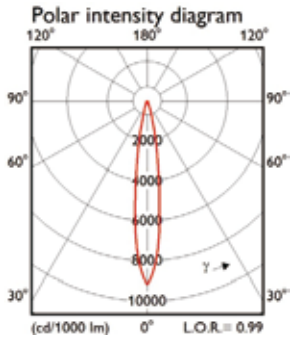

1600 Lm, 24D

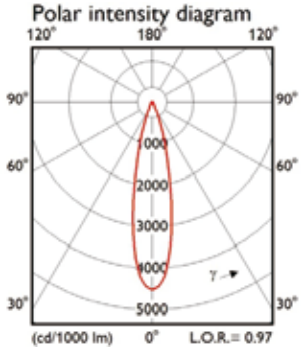

1600 Lm, 36D

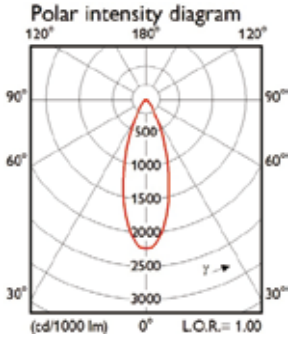

2400 Lm, 24D

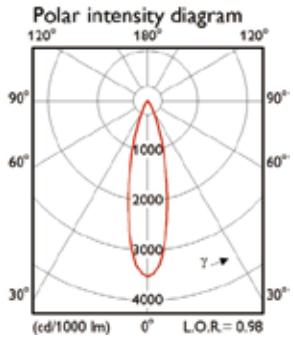

2400 Lm, 36D

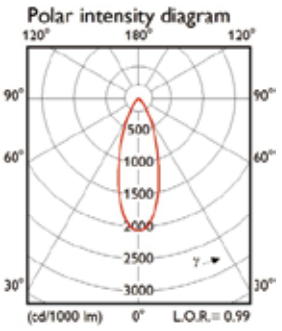

Installation & Safety

For detailed instructions on how to build a fixture using the SLS module and instructions on installed the completed fixture into the application area (track rail) please refer to the quick installation guide as below.

To build a proper fixture using the Certaflux SLS module several parts are needed, including:

1. A SLS module
2. A track rail fixture

Rail fixture list

Module	Fixture List
Certaflux SLS 800White	F1001-SLS-75 WT
Certaflux SLS 800lm Black	F1001-SLS-75 BK
Certaflux SLS 1600lm/2400lm White	F1002-SLS-100 WT
Certaflux SLS 1600lm/2400lm Black	F1002-SLS-100 BK

Maintenance & Handling

The Certaflux SLS module does not require special maintenance and handling. The surface of the module can be cleaned by dry or damp cloth. Please always ensure that the fixture is turned-off before proceeding.

During the assembly of the module into the track rail fixture, it will be necessary to perform a force action to the module. For reference, please see the guideline below.

Items	Value
Pull Strength (Lens)	>10N
Pull Strength (Cable)	>80N
Screw boss	Determine typical torque for screws on L2 PCB is 0.1Nm~0.15Nm

Packaging & Storage Environment, Disposal

Symbol	Parameter	Conditions	Min.	Typ.	Max	Unit
T_{st}	Storage temperature		-40		65	°C
P_{op}	Operating pressure		290			kPa
H_{st}	Relative humidity	Non condensing	5		95	%

The Certaflux SLS module is categorized as an electronic product. As such please consult the local regulation with regards to how electronic components and parts are handled.

Approbations, Certifications, Standards, Others

The Certaflux SLS meets the CQC standard
In addition, the following are some of the relevant compliance that the product meets.

EMC:
Conducted and Radiated Emissions of Lighting Equipment CISPR 15 ed 7.2 2007
Harmonic Current Emission IEC 61000-3-2 :2006 +A1+A2
Voltage fluctuations and flicker IEC 61000-3-3 :2008
Lighting Immunity IEC 61547 :2009

Environmental:
RoHS

Safety:
LED modules for general lighting, safety specifications IEC 62031
Photobiological safety of lamps and lamp systems IEC 62471
Lamp control gear - 2.13 d.c. or a.c. supplied electronic control gear for LED modules EN/IEC 61347-2-13
DC or AC supplied electronic control gear for LED modules - Performance requirements EN/IEC 62384

Cosmetics & Construction:
Internal guidelines that cover tolerances on mechanical and visual defects on the reflector and driver cover.

For more information on these and other topics please contact the local Philips sales organization.

Appendix:
Quick Installation Guide
Philips Certaflux SLS

Please take the time to read this installation guide before the installation. The guide contains important information and notes regarding the installation and operation
Please refer to the Design-in-Guide for further information; this Quick Installation Guide only contains information on how to assemble the module into a fixture and to install it into the ceiling

Warranty

Warranty only applies when the appropriate operating conditions and installation instructions are met. Please contact your local Philips sales office for more information

Warnings

- The installation guide does not supersede local and (inter)national regulations for electrical installations
- This Philips LED product must be installed by a professional electrician in accordance with the applicable and appropriate electrical codes and the instructions provided by Philips
- Before installation, maintenance or cleaning, always first switch off or disconnect the power and follow the appropriate safety procedures
- The module is Class-I, protective Earth (PE) to the heatsink is mandatory
- Input wire cross sectional area must be 0.75～1mm2 with 5mm stripped. Multi-cored wire need be soldered as single-cored wire before insert into driver
- Do not make sharp bends with electrical wires
- The luminaire shall, under no circumstance, be covered with insulation matting or similar material

Operating Conditions

- The product must be installed with the rail
- The typical ambient temperature where the product should operate is 25°C, with a maximum 35°C. Higher ambient temperature than 25°C may lead to a product lifetime reduction
- The average number of on/off switching cycles over life time should be 1 cycle/day

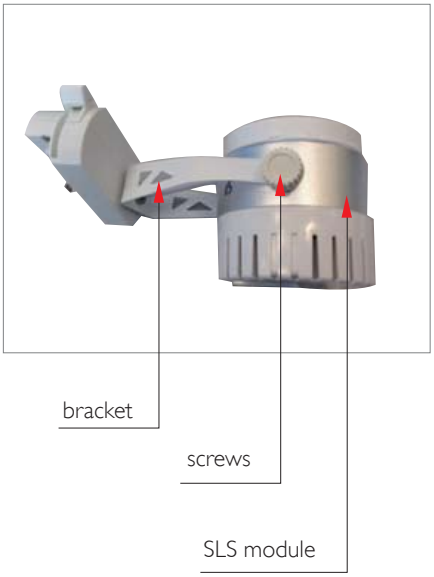

Installation

Connect the bracket onto the SLS product, and then tighten the screws

Wiring

cross sectional area must be 0.75~1mm^2 with 5mm stripped. Multi-cored wire need be soldered as single-cored wire before insert into driver

- Connect the neutral, ground and line wires accordingly

- Place the cover and tighten the screws, Insert the bracket into the rail

© 2018 Signify Holding, IBRS 10461, 5600VB, NL. All rights reserved.

The information provided herein is subject to change, without notice. Signify does not give any representation or warranty as to the accuracy or completeness of the information included herein and shall not be liable for any action in reliance thereon. The information presented in this document is not intended as any commercial offer and does not form part of any quotation or contract, unless otherwise agreed by Signify.

Philips and the Philips Shield Emblem are registered trademarks of Koninklijke Philips N.V. All other trademarks are owned by Signify Holding or their respective owners.

12/2018
www.philips.com