PHILIPS

Xitanium

SR Bridge

Design-in Guide

Reliable SR technology for connected LED applications

June 2019

Contents

Introduction to this guide 4
Applications 4
Information and support 4

Warnings and instructions 5
Safety warnings and installation instructions 5

Introduction to Xitanium SR Bridge 6
Xitanium SR Bridge 6
Xitanium SR Bridge versions 6
Programmable Interface 6
SimpleSet 6
SR Bridge Wiring diagram 6

Features of Xitanium SR Bridge 7
Mains input range 7
Switchable Output using Zero Crossing detection 7
Programmable Interface 7
SR (Sensor Ready) interface 7
Energy metering 7
Multiple Drivers on a Single SR Bridge 7
A Single EasyAir sensor Connected to Multiple SR Bridges 8

SR (Sensor Ready) interface 9
Sensor Ready Interface 9
Control device(s): 9
Rules for building an SR system: 10
Typical examples: 10
Digital communication: 11
Other considerations for SR interface: 11
Basic SR Bridge use case 11
SR Bridge Fault Detection use case 11

Mechanical Design-in 12
Form factors 12
Cable Length Limitations 12

Thermal Design-In 13
Introduction 13
Case Temperature Point (T_c) point 13

Electrical Design-In 14
Inrush current 14
Surge protection 14
Electromagnetic compatibility (EMC) 15
Electrical isolation 15

Disclaimer 16

Introduction to this guide

Xitanium LED SR Bridge

Thank you for choosing the Philips Xitanium Sensor Ready Bridge (SRB). In this guide you will find the information needed to integrate these devices into a LED luminaire or LED system.

This edition describes the Xitanium SR Bridges. We advise you to consult our web-sites for the latest up-to-date information.

Applications

Philips Xitanium SR Bridge allows existing DALI drivers to become part of wireless connected lighting systems for indoor lighting such as offices, public buildings, industrial applications and retail environments.

Information and support

If you require any further information or support please consult your local Philips office or visit www.philips.com/technology

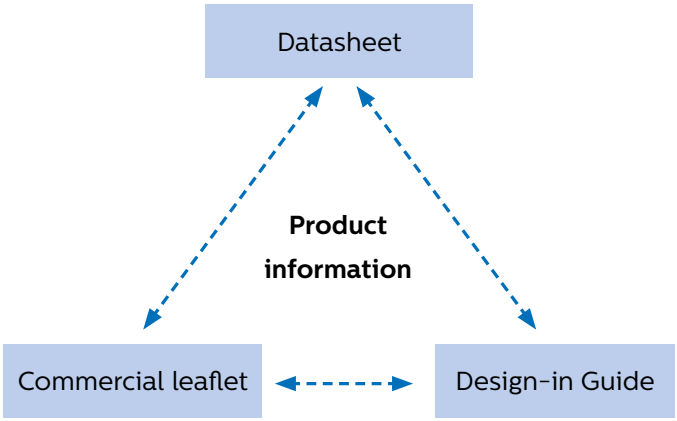

Warnings and instructions

Warning:

- Avoid touching live parts!
- Do not use SR Bridge and connected driver(s) with damaged housing and/or connectors!
- Do not use SR Bridge and connected driver(s) with damaged wiring!

Safety warnings and installation instructions

- Do not use damaged products
- Do not short SR Bridge output wires
- SR Bridge output wire is a live mains part when switched on
- The luminaire manufacturer is responsible for his own luminaire design and has to comply with all relevant safety standards
- The Xitanium SR Bridges are suitable for built-in Class I and Class II and independent Class I and Class II applications; they must not be exposed to the elements such as snow, water and ice or to any other chemical agent which can be expected to have an adverse effect on the driver (e.g. Corrosive environments). It is the responsibility of both luminaire manufacturer and installer to prevent exposure.
- Do not service the SR Bridge and connected driver(s) when the mains voltage is connected, this includes connecting or disconnecting the Loads.
- SR Bridge and connected driver(s) must be installed in accordance with national and local electrical codes.
- Please provide adequate earth and/or equipotential connections whenever possible or applicable.
- In case the SR Bridge is used in the independent application the SR Bridge must be protected against ingress of and exposure to including but not limited to water, oil, fat, acids or any other chemical agent - be it in the gaseous, vapor, liquid or solid form- which can be expected to have an adverse effect on the SR Bridge (e.g. use in wet /corrosive / dusty environments). It is the responsibility of both luminaire manufacturer and installer to prevent ingress and exposure. Common sense needs to be used in order to define the proper ingress protection of the SR Bridge for the intended application
- For sufficient thermal dissipation the SR Bridge must be mounted in such a way that distance between the SR Bridge and adjacent objects (excluding the mounting surface) is at least 20mm, see the illustration on the left. Do not exceed the maximum specified ambient temperature (t_a) stated on the SR Bridge

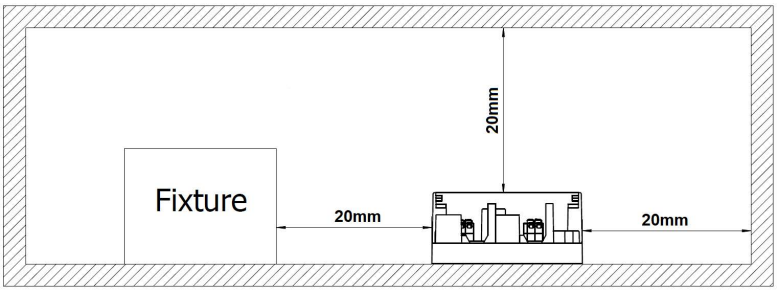

Introduction to Xitanium SR Bridge

Xitanium LED SR Bridge

Xitanium SR Bridge

The Xitanium SR Bridge is designed to connect existing or new DALI indoor lighting systems to SR (wireless) connected systems. Applications include offices, public buildings, industrial applications and retail environments. With Xitanium SR functionality, flexibility in luminaire design is assured and with the SR interface it is simpler than ever to connect to SR certified sensors.

Xitanium SR Bridge versions

The Xitanium SR Bridges described in this guide are available in 2 versions; a built-in and an independent version.
Detailed specifications can be found in the Xitanium SR Bridge datasheets which can be downloaded at www.philips.com/technology.

Programmable Interface

The Xitanium SR Bridges are programmable. Few features and parameters can be set via the SR Interface or SimpleSet using the Philips MultiOne Configurator software.

SimpleSet

Philips SimpleSet NFC wireless programming technology allows luminaire manufacturers to quickly and easily program Xitanium SR Bridges in any stage during the manufacturing process, without a connection to mains power, offering great flexibility.

For more information on MultiOne or SimpleSet, please visit www.philips.com/multione or contact your local Philips representative.

SR Bridge Wiring diagram

A typical application for the Xitanium SR Bridge is to connect the SR Bridge to 1 or more Philips Xitanium DALI drivers and a SR (RF) sensor (see Figure 1).

Figure 1 Wiring diagram

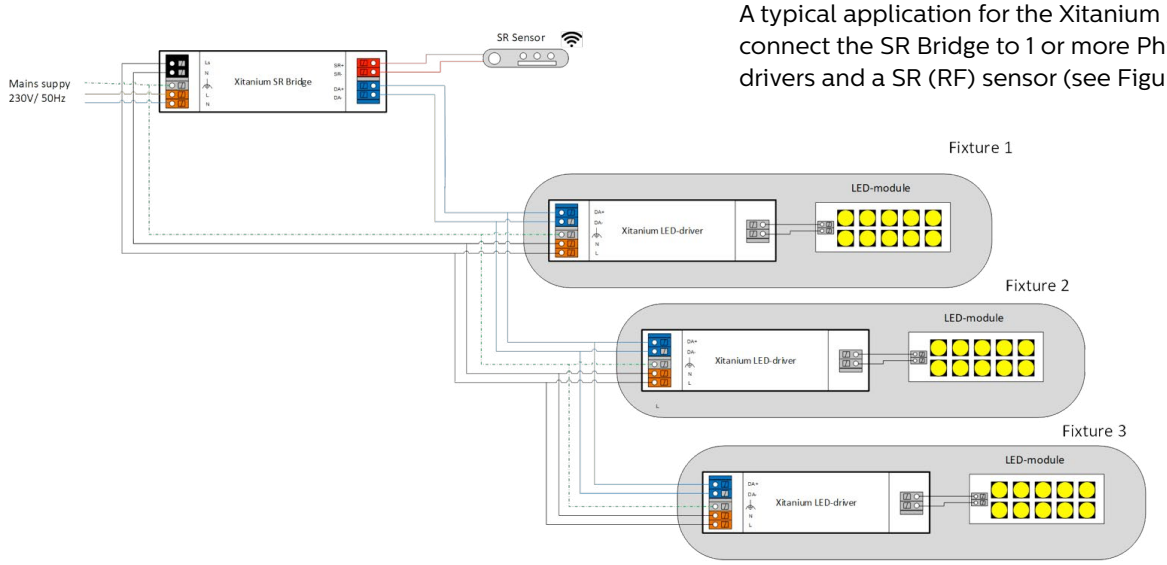

Features of Xitanium SR Bridge

Mains input range
The Xitanium SR Bridge can operate on mains input voltages from 220Vac – 240Vac.

Switchable Output using Zero Crossing detection
The Output of the Xitanium SR Bridge can be switched on/off using relay switching with Advanced Zero Crossing technology. This allows for higher loads to be switched on/off.

Note: The relay can be switched off and DALI off command can be used instead. The Philips MultiOne software can be used for configuration.

Note: For DALI, Identification, SET POWER ON LEVEL command cannot stop the identification blinking mechanism immediately.

Programmable Interface
The Xitanium SR Bridges are programmable. A number of features and parameters can be set via either MultiOne Configurator or SimpleSet. Items that can be programmed are:

- AOC
- Fault detection.

SR (Sensor Ready) interface
The Xitanium SR Bridge features a digital interface (SR interface) to enable direct connection to any suitable SR (certified) RF sensor.

Energy metering
The Xitanium SR Bridge has built in Energy/power measurement capability.

Multiple Drivers on a Single SR Bridge
More than one driver can be connected to a SR bridge. The details can be found in the datasheet of the SR bridge that can be downloaded at www.Philips.com/Technology.

A Single EasyAir sensor Connected to Multiple SR Bridges

As with SR drivers, it is possible to use one sensor to control multiple luminaires. When EasyAir is connected to multiple Philips Xitanium SR Bridges (and drivers), the maximum number of connected bridges (and drivers) is 10 and only four can have enabled DALI power supply. To minimize unnecessary losses, it is recommended to turn on only two DALI power supplies. Each SR bridge (and driver) provides approximately 55 mA of current on the DALI bus, and EasyAir is limited to 250 mA.

More details can be found in the Design in Guide for the EasyAir sensors.

SR (Sensor Ready) interface

Sensor Ready Interface

Xitanium LED SR Bridges feature a digital SR interface to enable direct connection to any suitable SR (certified) RF sensor.
The simple two-wire SR interface supports these key functions:

- Switchable built-in SR bus power supply to provide power to the connected control device (e.g., an RF module or a CMS controller)
- Two-way digital communication between the SR Bridge and control device, using standard DALI 2.0 protocol
- Standard DALI dimming, ON/OFF and control functions
- Power and energy reporting utilizing the power monitoring integrated in the SR Bridge
- Diagnostic information

These functions are described in detail below: Built-in SR bus power supply:
The SR Bridge has the ability to supply the SR bus with a built-in power supply that can be turned ON/OFF. By default the power supply is turned on and ready to be used with an external control device (e.g. RF sensor). This should in principle be turned off if used in DALI networks with multiple drivers to avoid that wrong polarity can lead to very high currents on the DALI bus. However, we do not recommend to use this SR Bridge in a wired DALI network. For this purpose FP or TD drivers are made (Industry)

The internal power supply can be turned ON/OFF with the MultiOne configuration software using the SimpleSet tool or the SR interface (DALI) tool. The built-in SR supply is capable of delivering a minimum current of 52 mA (ISR) to the SR bus and the connected device(s). The built-in SR supply will never supply more than 60mA (ISR_MAX).
The SR bus voltage will be between 12 V and 20 V depending on the connected device load and the amount of SR supplies put in parallel. See Figure 2 for the typical VI curve for one SR supply. When the internal SR supply is switched OFF the SR Bridge will extract a maximum of 2 mA from the SR bus (like standard DALI gear).

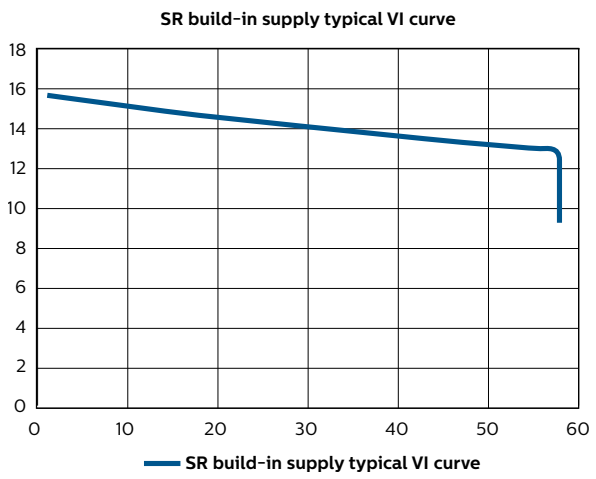

Figure 2 DALI Logarithmic dimming curve

Control device(s):

Most control devices intended to be used in an SR system will be powered from the SR bus. When communication is present on the SR bus, the bus gets pulled down by the data packages. This reduces the average current available for the power consuming control device. When communicating the average available current can drop with 50%. This should be taken into account when designing the control device. The extracted peak current (ISR_EXTRACTED) should be limited by the control device.

Rules for building an SR system:
Respect SR bus polarity when more than one SR supply is connected in parallel.
The total maximum SR bus current (ISR_MAX_TOTAL) must be ≤ 250 mA. This current can be determined by adding ISR_MAX of all SR supplies. As a consequence a maximum of four SR supplies can be connected in parallel.
The total current delivered to the SR bus (ISR_DELIVERED) can be determined by adding ISR of all SR supplies.
The total current extracted from the SR bus (ISR_ EXTRACTED) can be determined by adding up consuming devices like SR drivers with switched OFF SR supply, other DALI gear and control devices.
To guarantee good communication, a margin of 8 mA is needed to drive the SR bus itself (ISR_MARGIN).
The following rule should be respected:
ISR_EXTRACTED + ISR_MARGIN ≤ ISR_DELIVERED.

Caution:

- When the above rules are not taken into account, communication cannot be guaranteed and damage to components may occur.

Typical examples:
One SR Bridge is connected to a control device. The internal SR supply of this Bridge is switched ON. The specification of the control device states that the extracted peak current is 40 mA. Will this SR system have good communication?

- One SR supply is involved, so BUS polarity is not an issue.
- ISR_MAX_TOTAL = 60 mA. This is ≤ 250 mA
- ISR_DELIVERED = 52 mA
- ISR_EXTRACTED = 40 mA
- ISR_MARGIN = 8 mA
- 40 + 8 mA ≤ 52 mA

Is it allowed to add an SR driver with switched OFF SR supply to this SR system?

- Yes, an SR driver with switched OFF SR supply extracts 2 mA from the SR bus.
- ISR_EXTRACTED = 40 + 2 = 42 mA.
- 42 + 8 mA ≤ 52 mA

Can this SR supply also be switched on?

- Yes, but you should check the polarity of both SR supplies.
- ISR_TOTAL = 2 * 60 = 120 mA. This is ≤ 250 mA.

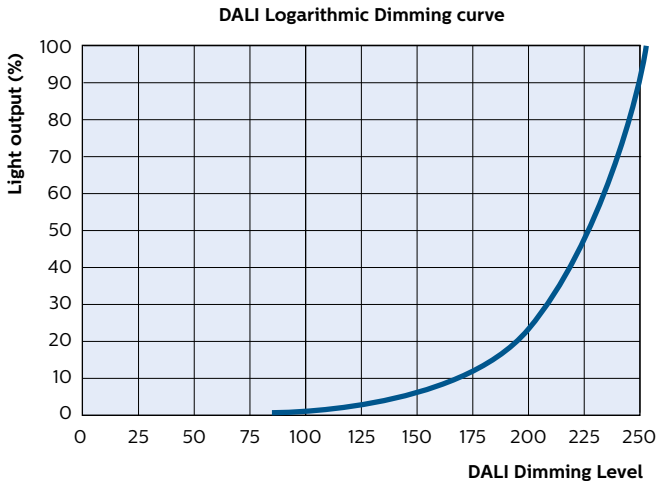

Figure 2 DALI Logarithmic dimming curve

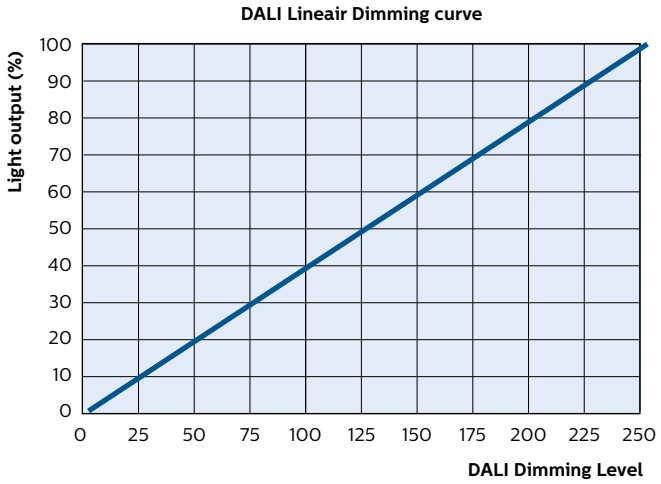

Figure 3 DALI Linear dimming curve

Digital communication:

Dimming is possible through the standard digital interface based on DALI 2.0 (IEC 62386 101, 102 Ed2.0). Dimming range is 1%-100%. Dimming curves can be either logarithmic or linear (see Figures 3 and 4).

- Note that the output current at 1% and 100% level is determined by the connected driver.
- The SR Bridge has built-in energy measurement capability and can report energy and actual power consumption. Accuracy of power measurement is higher of following 2 values: 0.5W or +/-4 % measured input power. This feature stores parameters in the non-volatile memory bank provision specified in the DALI 2.0 standard and the SR Certified specification.
- The SR Bridge also supports many diagnostic features/ parameters which can be accessed via the SR interface, as per SR Certified specification
- Although the SR interface supports DALI commands, it is not a DALI interface as such since the interface is polarity-sensitive. We do not advise use of the SR Bridge in wired DALI networks.

Other considerations for SR interface:

- Length of wiring; using 18AWG (0.8 mm2), the maximum length of the SR wiring, when used for DALI communication, should not exceed 50ft (15m).
- The SR control interface terminals are SELV as per IEC.

Basic SR Bridge use case

The basic use case for the SR Bridge is to connect 1 or more Xitanium DALI drivers and a SR (certified) sensor to the SR Bridge. The maximum load that the SR Bridge can handle depends on the Mains input apparent power. The maximum allowed loads are given in the SR Bridge datasheet.

SR Bridge Fault Detection use case

The SR Bridge is measuring the Power/Energy consumed of the connected loads constantly. This feature can be used to monitor the connected loads and determine if one (or more) of the loads have failed. During normal operation (at Full output) the connected loads/drivers draw a certain amount of power. If one (or more) connected loads fail the power consumption will be reduced. The SR Bridge has the capability to set an (alarm) message flag based on a trigger point that the load has been reduced. The fault detection accuracy depends on the trigger point and minimum detection dim level, which can be configured by MultiOne.

Mechanical Design-in

Figure 4 SRB-built in Version

Figure 5 SRB-independent Version

Figure 9 Feig Electronic ID CPR30-USB SimpleSet interface tool

Form factors

Xitanium SR Bridges will become available in 2 different versions. Version 1 (SRB-built-in) is for mounting inside luminaires (see Figure 7). Version 2 (SRB-independent) will have strain relief for independent applications (see Figure 8). The specific dimensions can be found in the SR Bridge datasheet.

Mounting screw dimensions should be based on the specified fixing hole diameter in the SR Bridge datasheet. Oversized and undersized screws should not be used in order to prevent damage to the mounting feet or loose mounting.

Please allow for sufficient free space around the SimpleSet antenna if the SR Bridge is to be configured after mounting in the luminaire. The minimum recommended space is depending on the type of SimpleSet configuration tool. Using the tool as shown in Figure 9 (Feig Electronic Desktop Reader ID CPR30-USB), the minimum distance is 15 mm (+/-1mm).

Cable Length Limitations

For the length of the cable for the SR bus, please refer to datasheet of the SR drivers and for the DALI bus, please refer to the datasheet of DALI drivers.

Thermal Design-In

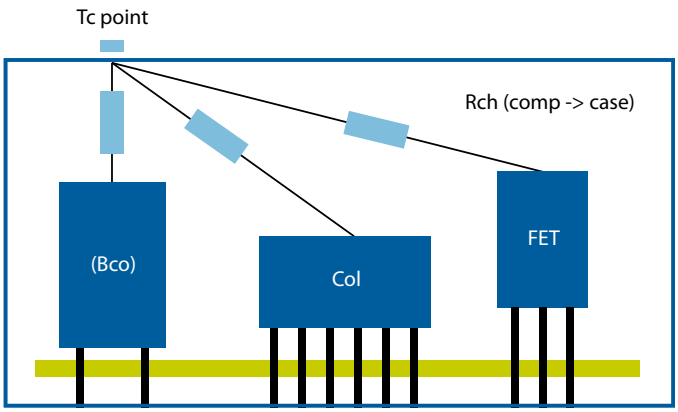

Figure 10 Schematically representation of internal thermal paths to the SR Bridge Tc point

Figure 11 Product label indicating Tc point

Introduction

The following section covers the critical thermal management point to facilitate design-in. Taking thermal considerations into account will ensure optimal performance and lifetime of the system. The maximum case temperature (T_c max) of the SR Bridge should not be exceeded. It is mandatory to keep the SR Bridge T_c max within specification to meet SR Bridge lifetime and failure rate specifications. Please refer to the product datasheet for specific values.

Case Temperature Point (T_c) point

To achieve optimal lifetime and reliability, it is critical that the temperature of the components in the SR Bridge remains within its rating. During design, all precautions are taken to ensure that the internal components are at the lowest possible temperatures.

Initial thermal analysis is performed via IR scans at room temperature to identify the hottest components of the SR Bridge. Subsequently, detailed temperature measurements of the critical components are performed under various input/output conditions at worst case operating temperatures.

The temperature measurements are then correlated to a T_{case} (T_c) point on the SR Bridge as shown in Figure 10. T_c temperature is a proxy for the temperatures of the critical internal SR Bridge components.

The location of the T_c point is identified on the product label (Figure 11).

The specified T_c max of the SR Bridge must NEVER be exceeded.

Note: In order to ensure accurate T_c test results, the case temperature should not vary by more than 1°C for a period of at least 30 minutes after a stable temperature has been achieved. T_c point should not be obstructed when mounted in the luminaire/enclosure.

Electrical Design-In

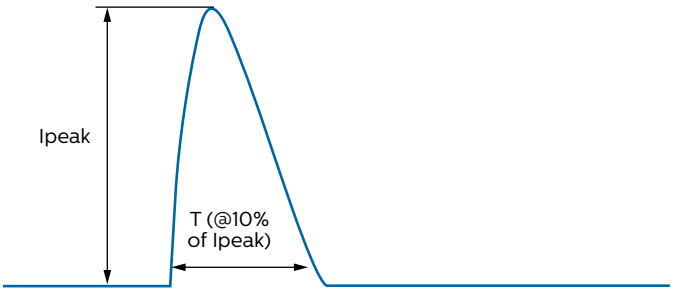

Figure 12 Graphical representation of Inrush current

Inrush current

Inrush current refers to the brief high input current that flows into a device during the moment of connection to mains; see Figure 12. Typically, the amplitude is much greater than the steady-state input current.

The SR Bridges are using advanced “Zero-Crossing” technology by turning on the connected load only when the mains voltage is near the zero crossing. This reduces the inrush current of the connected load(s) to a minimum.

The peak and duration values are given in the individual product datasheet. It should be noted that the inrush current measurement given in the datasheet is the absolute worst case value.

What does inrush current do? High inrush currents can cause circuit breakers or fuses to open if not designed to handle this current. It can limit how many drivers can be connected to a circuit breaker (CB) or fuse. In case of the SR Bridge, it limits how many drivers can be connected to the SR Bridge.

Surge protection

Philips Xitanium SR Bridges have limited built-in surge protection (in accordance with IEEE/ANSIC62.41.2 Transient Surge Requirements). The datasheet gives the protection level of the SR Bridge.

In case the SR Bridge is built into a luminaire, appropriate surge protection should be designed into the luminaire.

Electromagnetic compatibility (EMC)

Xitanium LED SR Bridges meet EMC requirements per CISPR 15. These tests are conducted with a reference setup. To maintain good EMC performance at the luminaire level, the input, output and dim wires should be kept as far apart as possible. The addition of ferrite beads in series with the wires or coupling the wires through ferrite cores within the luminaire may improve the overall EMC performance. However, selection of the type and characteristics of the additional filter depends on what frequency components have to be damped and by how much.

Electrical isolation

Philips Xitanium SR Bridges' output is isolated from the primary. Isolation is also provided between all the electronic circuits and the chassis.

Xitanium Bridges meet IEC61347-1 and the output terminals have been qualified as SELV for SR terminals and FELV for DALI master terminals.

Disclaimer

Note that the information provided in this document is subject to change.
This document is not an official testing certificate and cannot be used or construed as a document authorizing or otherwise supporting an official release of a luminaire. The user of this document remains at all times liable and responsible for any and all required testing and approbation prior to the manufacture and sale of any luminaire.
The recommendations and other advice contained in this document, are provided solely for informational purposes for internal evaluation by the user of this document. Philips Lighting does not make and hereby expressly disclaims any warranties or assurances whatsoever as to the accuracy, completeness, reliability, content and/or quality of any recommendations and other advice contained in this document, whether express or implied including, without limitation, any warranties of satisfactory quality, fitness for a particular purpose or non-infringement. Philips Lighting has not investigated, and is under no obligation or duty to investigate, whether the recommendations and other advice contained in this document are, or may be, in conflict with existing patents or any other intellectual property rights. The recommendations and other advice contained herein are provided by Philips Lighting on an “as is” basis, at the user’s sole risk and expense.
Specifically mentioned products, materials and/or tools from third parties are only indicative and reference to these products, materials and/or tools does not necessarily mean they are endorsed by Philips Lighting. Philips Lighting gives no warranties regarding these and assumes no legal liability or responsibility for any loss or damage resulting from the use of the information thereto given here.

www.lighting.philips.co.uk/oem-emea/products/connected-lighting

06/2019
Data subject to change